Multi-modal, Multi-task and Multi-label for Music Genre Classification and Emotion Regression

Yagya Raj Pandeya
Division of computer science and engineering, Jeonbuk National University
Jeonju-City, South Korea
yagyapandeya@gmail.com

Jie You
Division of computer science and engineering, Jeonbuk National University
Jeonju-City, South Korea
youjie80@gmail.com

Bhuwan Bhattarai
Division of computer science and engineering, Jeonbuk National University
Jeonju-City, South Korea
bhubon240@gmail.com

Joonwhoan Lee
Division of computer science and engineering, Jeonbuk National University
Jeonju-City, South Korea
chlee@chonbuk.ac.kr

2021 International Conference on Information and Communication Technology Convergence (ICTC) | 978-1-6654-2383-0/21/$31.00 ©2021 IEEE | DOI: 10.1109/ICTC52510.2021.9620826

***Abstract*—A smart system is highly desirable with the capability to divide music into coarse and fine categories based on emotion and genre. In this paper, we classify the music based on genre and emotion into 44 class categories which further sub-divided into 255 fine categories. The music and lyrics information is input into two separate networks and the global information is integrated for the final classification and regression task. We proposed a channel and filter convolution network by factorizing spatial and temporal interactions of the standard 2D/3D convolutions. Furthermore, the channel interaction of the general residual block is factorized to one. The proposed convolutional method yields significant gains in accuracy and lower computational cost. The network is trained and tested on a public dataset and evaluated for individual and joint representation of audio and lyrics networks.**

Keywords—multi-modal, multi-task, multi-label, music genre classification, emotion regression

I. Introduction

The rapid development of information technology created a huge market of digital music where the user usually demands their favorite song based on genre or emotional categories. Music classification is the oldest and unsolved problem in music information retrieval society and has become a research hotspot in recent years. One major problem in music genre classification is undefined class categories because they are sub-divided into multiple sub-categories according to person, community, cultural groups, or geographical region. Therefore, a multi-level music classification system is desirable in this digital age with the capabilities to differentiate the music piece in coarse and fine-level based on the requirements. Music usually has different forms such as text (lyrics), sound (audio), video (music –video). It allows us to use multimodal representation to classify the music using different representations.

In the past, researchers proposed classification methods to successfully classify the music genre and emotions using single information (uni-modal) or multiple information (multimodal). In the recent development of the deep-learning algorithm, the music information retrieval (MIR) tasks are widely analyzed. For MIR problems, music genre classification is significantly important and widely demanding because it facilitates both the search for music and the organization of music collections for music streaming service providers [1]. A deep neural network (DNN) is a powerful technique of machine learning that effectively selects the critical features from complex data sets and deriving a model that expresses those features. DNNs are widely used in the recent year in an audio domain such as classification [2, 3], sound event detection [4, 5], music classification [6], music source separation [7], music transcription [8], and music style transfer [9]. The convolution neural networks (CNNs) and recurrent neural networks (RNNs) are massively used for music classification tasks [10, 11]. Some studies [12, 13] contributed to the music genre and emotion classification tasks using transfer learning. Some studies [14, 15] proposed some methods for music emotion analysis.

The evolution of deep learning technology moved the active research direction of music classification from unimodal to multimodal. Some research [16, 17, 18] used both the audio features and the lyrics of a song for music emotion classification. The visual information with audio was found highly beneficial in [19, 20]. The music genre and emotion are usually defined with some broad class categories even they are mutually exclusive. Most traditional research focused on classifying the music tracks into a single class but sometimes it can be too broad for certain applications such as recommendation, advertisement, or personal use. Therefore, it is necessary to categories musical items into the diversified and fine-grained level. Some studies [21, 22, 23] explore this problem and proposed their methods.

In this paper, we proposed a deep neural network for multi-modal, multi-label, and multi-task problem solving using single architecture in an end-to-end manner. We trained the proposed network jointly for the classification and regression task of music that has never been done in the past. The terminologies used here are explored for clarification to the reader.

- Multi-modal: We experience the multimodal every day as we see the object, smell odors, hear the sound, and taste flavors. A modality generally refers to the task in which something experienced or is happens [24]. In machine learning, unimodal takes the single source of information and the system became multimodal when multiple data modalities are involved in it to process-related information [25, 26]. In this study, the lyrics and audio information of music are integrated to classify the music genre and regress the emotion of the music piece.

This work was funded by the National Research Foundation of Korea (NRF) under the Development of AI for Analysis and Synthesis of Korean Pansori NRF-2021R1A2C2006895 Project.

Authorized licensed use limited to: University of Wolverhampton. Downloaded on March 13,2026 at 04:29:49 UTC from IEEE Xplore. Restrictions apply.

- Multi-label: In multi-label classification, multiple outputs are expected where target labels are assigned precisely into more than two classifiable instances that better represent that group of unique characteristics. Deep neural networks are well-suited for the multi-label problem, as it allows to have multiple outputs in their final layer[ml1]. In this study, our DNN can allow us to categories the music genre in multiple instances of a single broad category.
- Multi-task: In multi-task learning, multiple related tasks learn simultaneously with the hope of improving the generalization performance of all the tasks at hand, while exploiting commonalities and differences across tasks [27]. Such approach offers advantages like fast learning by leveraging auxiliary information, improved data efficiency, and reduced overfitting through shared representations, when compared to training the models separately [28]. In this experiment, we designed the classification and regression task at the same time to jointly learn the music information and regularize each other.

In this work, we integrate the lyrics and audio information of music and trained a DNN with low computational cost. The neural network is designed for regression and classification tasks for 44 coarse and 255 fine class categories. The network is evaluated using accuracy and visual analysis.

The remainder of this article is organized as follows. In Section II, we present the data preparation to train our proposed network for multi-task learning. Section III includes detail of novel convolution methods that yield the improvement in network performance while recusing the system computational cost. Section IV describes the proposed DNN architecture for multi-modal information processing for multi-task and multi-class problem-solving. Section V includes the statistical and visual test results for proposed multimodal architectures. Finally, we conclude the study by discussing further directions for future research in Section VI.

II. Mini Music4All Dataset

Music4All[29] dataset is used in our experiment where several pieces of dataset information such as metadata, tags, genre provided for 30-seconds audio clips, and lyrics. We used the English songs of Music4All dataset with lyrics information. The data is filtered out and finally selected 81,773 samples to train our network. The dataset became noisy for text processing due to the mixed representation of multiple languages with English in music lyrics. We used only the music with lyrics in the English language in our experiment. Another problem with this dataset is the low quality of the audio recording. The original dataset has 853 unique genre tags, but this experiment used only 44 genres as coarse categories and 255 fine categories for the classification task. For example; for audio with ID {*00i0OB17z3m3yamO*}, we categories it into {*alternative*} class and subdivided it into {*alternative rock, rock, alternative metal*} category. For the regression task, we used the valence score given in the original dataset.

III. Channel and Filter Separable Convolution

The standard convolution in DNN increases the number of training parameters exponent in each additional layer especially if we are dealing with large dimensional data like video or multi-band images. It is cost-effective if we lower computational costs by lowering the network parameters. In this study, we recede the standard 2D convolutions are factorized by separating spatial interactions and temporal interactions. Furthermore, the channel interaction of the general residual block is factorized to one. This leads to the design of a new channel and filter separable convolutional block that yields significant gains in accuracy and lower computational cost. The proposed approach for a 2D filter is illustrated in Fig. 1.

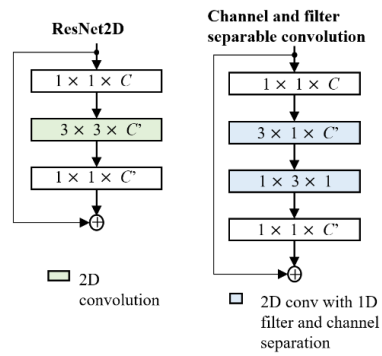

Fig. 1. Difference in standard residual block for 2D convolution (left) and the proposed channel and filter separable convolution (right).

The square filter of 2D convolution was divided into a temporal filter (1 x n) and spatial filter (n x 1), as in [30]. The channel size was reduced to one in the sequential block of dense residual network for the separable channel. Using a novel channel and filter separable convolution, we drastically reduced the complexity and improved the system performance on both music and video network.

IV. Proposed System

In this study, we proposed a dense residual neural network using filter and channel separable convolution. The network is designed to take two inputs from audio and lyrics of music. The audio is preprocessed in time-frequency representation for 30 seconds audio with a sampling rate 22050Hz, hop-size 512, and 128 Mel-bins. The log Mel-spectrogram feature is used in an audio network that matched the human auditory system. The use of the log Mel spectrogram has two benefits compared to waveform audio. First; it reduces the amount of data that need to process by the neural network and second; it is related to human auditory perception and instrument frequency range [31].

The lyric network follows the text pre-processing before inputting it into the network. The raw text is tokenized and GloVe's pre-trained embedding dictionaries with 300 dimensions are used for the vectorization of our tokens. We match our tokens with the pre-trained dictionary and filter out words that appear rarely.

Authorized licensed use limited to: University of Wolverhampton. Downloaded on March 13,2026 at 04:29:49 UTC from IEEE Xplore. Restrictions apply.

The fixed-sized 128 × 1296 log Mel-spectrogram of two-channel where the magnitude and phase information of the sinusoidal signal is kept and input to our audio network. The audio network contains five blocks of the dense residual block with filter and channel separable convolution, shown in Fig. 2. The rectangular convolutional filter with receptive fields of size 5 × 1, 1 × 5, 3 × 1, and 1 × 3 is used in our architecture. The ReLU function is used as a non-linearity after batch normalization. Max pooling with a size of 2 × 2 is applied in both parallel branches of the residual network to reduce the feature map size. An additional convolution layer is used after each dense residual block with standard 2D convolution to smooth out the features. The network is designed to capture the harmonic patterns of audio information and textual semantics for the classification task. A stack of convolutional layers is followed by a global average pooling (GAP) and a fully connected layer of 512 channels. Finally, the multi-class classification is computed using *Sigmoid* activation function. The coarse genre classification result is obtained using *Softmax* nonlinearity and the regression task is computed with *Tanh* nonlinearity. The genre classification used categorical cross-entropy loss and regression used mean square error loss to compute the probable class category and emotional value respectively.

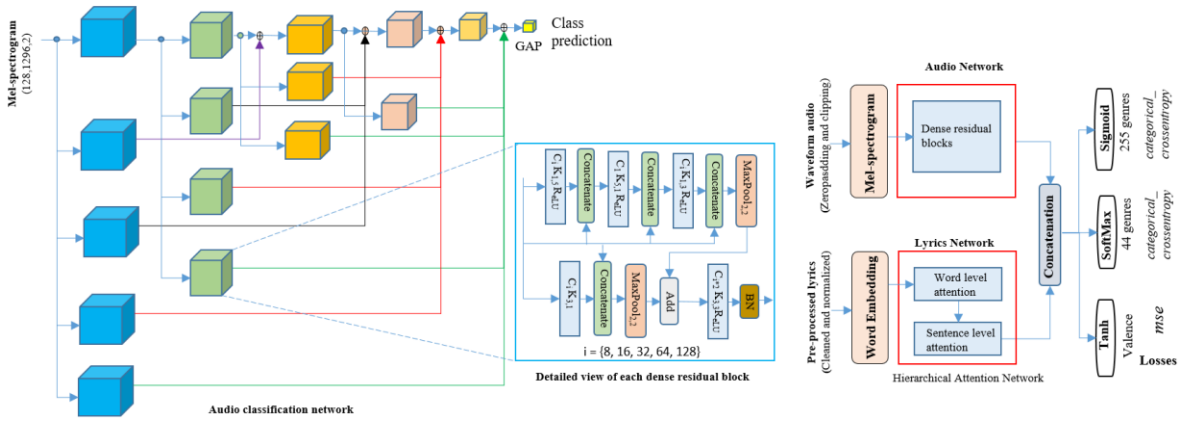

Fig. 2. A schematic overview of the proposed multimodal and multi-task DNN learner (right) and the detailed view of the proposed audio network (left).

It is important to make a comparison to validate our network in terms of performance and complexity. We used a past CNN network [12] designed for classification and regression tasks. We fine-tuned the network with its pre-trained weight because the source domain and target domain are the same. The original author of this paper shows good results for classification regression tasks after transfer learning. However, the network cannot have an acceptable result in our multi-label and multi-task problem. A comparison of our proposed method and the past network[12] is detailed provided with statistical data in the experimental section.

The word vector of size 300 is inputted to the lyrics network to extract the text features. We used the hierarchical attention network (HAN) [32] for music lyrics emotion prediction. HAN can understand the importance of a sentence in a document and also recognize the changing meaning of a word depending on the context. As shown in Fig. 2, attention is applied at both word and sentence levels to understand the importance of the word.

V. Experimental Results

We applied end-to-end training using a sub-set of the Music4All dataset. The music and lyrics network are trained jointly for multitasking for classification and regression problems. Table I show the result of our proposed network and compares the importance of multimodal. The result illustrates that the multimodal representation is valuable for music classification. The channel and filter separable convolution is found efficient to reduce the network complexity in a significant amount.

TABLE I. Evaluation Result of CNN for Music Classification and Regression

Network	Coarse accuracy	Fine accuracy	Valance MSE	Parameters
HAN	0.27808	0.1506	0.04821	4,504,560
K-Choi CNN [12]	0.34546	0.19571	0.03737	6,252,516
Proposed Audio Net	0.40345	0.26714	**0.03338**	2,041,067
Proposed Audio Net + HAN	**0.42212**	**0.28060**	0.03501	6,652,427

As shown in Table I, the proposed audio network in this paper is robust for multi-task classification and regression problems compared to the simple 5-layer CNN [12] (K-Choi CNN) trained on the Million song dataset [33], yielding significantly lower computational complexity. In the multitask processing, the proposed audio network boosted its efficiency in adding the lyrics information. For fair comparison and boosts the research in this direction of research, we publicly available our code and dataset materials at GitHub repository (*https://github.com/yagyapandeya/Multi-modla-Multi-task-and-Multi-label-for-Music-Genre-Classification-and-Regression*).

Authorized licensed use limited to: University of Wolverhampton. Downloaded on March 13,2026 at 04:29:49 UTC from IEEE Xplore. Restrictions apply.

VI. Conclusion

The study is related to jointly music classification and regression problem solving using multimodal representation using lyrics and audio of music. We proposed a novel method of convolution that yields a high classification score and lower computational complexity. The proposed deep neural network with channel and filter separable convolution achieved a better result than the conventional convolutional neural network for music genre classification and emotion analysis using a regression method. The genre classification task is analyzed in coarse and fine level using multi-label target for a brad class category of music. In the overall analysis, we found that the proposed method is applicable in the real-world scenario but the efficiency of the network need some improvement.

References

[1] W. W. Y. Ng, W. Zeng and T. Wang, "Multi-Level Local Feature Coding Fusion for Music Genre Recognition," in IEEE Access, vol. 8, pp. 152713-152727, 2020, doi: 10.1109/ACCESS.2020.3017661.

[2] Y. R. Pandeya, D. Kim and J. Lee, "Domestic Cat Sound Classification Using Learned Features from Deep Neural Nets," Appl. Sci., 8(10), 1949, 2018.

[3] Y. R. Pandeya and J. Lee, "Domestic Cat Sound Classification Using Transfer Learning," Int. J. Fuzzy Log. Intell. Syst. 2018;18(2):154-160, 2018.

[4] Y. R. Pandeya, B. Bhattarai and J. Lee, "Visual Object Detector for Cow Sound Event Detection," in IEEE Access, vol. 8, pp. 162625-162633, 2020, doi: 10.1109/ACCESS.2020.3022058.

[5] Y. R. Pandeya, B. Bhattarai and J. Lee, "Sound Event Detection in Cowshed using Synthetic Data and Convolutional Neural Network," 2020 International Conference on Information and Communication Technology Convergence (ICTC), 2020, pp. 273-276, doi: 10.1109/ICTC49870.2020.9289545.

[6] A. Ghildiyal, K. Singh and S. Sharma, "Music Genre Classification using Machine Learning," 2020 4th International Conference on Electronics, Communication and Aerospace Technology (ICECA), 2020, pp. 1368-1372, doi: 10.1109/ICECA49313.2020.9297444.

[7] B. Bhattarai, Y. R. Pandeya and J. Lee, "Parallel Stacked Hourglass Network for Music Source Separation," in IEEE Access, vol. 8, pp. 206016-206027, 2020, doi: 10.1109/ACCESS.2020.3037773.

[8] Q. Kong, B. Li, X. Song, Y. Wan, and Y. Wang, "High-resolution Piano Transcription with Pedals by Regressing Onsets and Offsets Times." arXiv preprint arXiv:2010.01815, 2020.

[9] W.T. Lu, and L. Su, "Transferring the Style of Homophonic Music Using Recurrent Neural Networks and Autoregressive Model", 19th International Society for Music Information Retrieval Conference, 2018.

[10] Z. Nasrullah and Y. Zhao, "Music Artist Classification with Convolutional Recurrent Neural Networks," arXiv:1901.04555v2, 2019.

[11] N. Pelchat and C. M. Gelowitz, "Neural Network Music Genre Classification," in Canadian Journal of Electrical and Computer Engineering, vol. 43, no. 3, pp. 170-173, Summer 2020, doi: 10.1109/CJECE.2020.2970144.

[12] K. Choi, G. Fazekas, M. Sandler, and K. Cho, "Transfer learning for music classification and regression tasks," arXiv:1703.09179v4, 2017.

[13] B. Liang and M. Gu, "Music Genre Classification Using Transfer Learning," 2020 IEEE Conference on Multimedia Information Processing and Retrieval (MIPR), 2020, pp. 392-393, doi: 10.1109/MIPR49039.2020.00085.

[14] Y. Yang, Y. Lin, Y. Su and H. H. Chen, "Music Emotion Classification: A Regression Approach," 2007 IEEE International Conference on Multimedia and Expo, 2007, pp. 208-211, doi: 10.1109/ICME.2007.4284623.

[15] Y. Lin, Y. Yang, H. H. Chen, I. Liao and Y. Ho, "Exploiting genre for music emotion classification," 2009 IEEE International Conference on Multimedia and Expo, 2009, pp. 618-621, doi: 10.1109/ICME.2009.5202572.

[16] Yang YH., Lin YC., Cheng HT., Liao IB., Ho YC., Chen H.H. (2008) Toward Multi-modal Music Emotion Classification. In: Huang YM.R. et al. (eds) Advances in Multimedia Information Processing - PCM 2008. PCM 2008. Lecture Notes in Computer Science, vol 5353. Springer, Berlin, Heidelberg.

[17] W. Shi and S. Feng, "Research on Music Emotion Classification Based on Lyrics and Audio," 2018 IEEE 3rd Advanced Information Technology, Electronic and Automation Control Conference (IAEAC), 2018, pp. 1154-1159, doi: 10.1109/IAEAC.2018.8577944.

[18] G. Liu and Z. Tan, "Research on Multi-modal Music Emotion Classification Based on Audio and Lyirc," 2020 IEEE 4th Information Technology, Networking, Electronic and Automation Control Conference (ITNEC), 2020, pp. 2331-2335, doi: 10.1109/ITNEC48623.2020.9084846.

[19] A. Yazdani, E. Skodras, N. Fakotakis, et al. "Multimedia content analysis for emotional characterization of music video clips," J Image Video Proc 2013, 26 (2013).

[20] Y.R., Pandeya and J. Lee, "Deep learning-based late fusion of multimodal information for emotion classification of music video," Multimed Tools Appl 80, 2887–2905, 2021.

[21] K. Trohidis, G. Tsoumakas, G. Kalliris and I. Vlahavas, "Multi-label Classification of Music into Emotions," 9th International Society for Music Information Retrieval Conference, 2008.

[22] S. Oramas, O. Nieto, F. Barbieri and X. Serra, "Multi-label Music Genre Classification from Audio, Text, and Images Using Deep Features," 18th International Society for Music Information Retrieval Conference, 2017

[23] A. Schindler and P. Knees, "Multi-Task Music Representation Learning from Multi-Label Embeddings," arXiv:1909.07730v1, 2019.

[24] T. Baltrusaitis, C. Ahuja, and L.P. Morency, "Multimodal Machine Learning: A Survey and Taxonomy," arXiv:1705.09406v2, 2017.

[25] Y. R. Pandeya, B. Bhattarai and J. Lee, "Music video emotion classification using slow–fast audio–video network and unsupervised feature representation," Sci Rep 11, 19834, 2021. https://doi.org/10.1038/s41598-021-98856-2

[26] Y. R. Pandeya, B. Bhattarai and J. Lee, "Deep-Learning-Based Multimodal Emotion Classification for Music Videos" Sensors 21, no. 14: 4927, 2021. https://doi.org/10.3390/s21144927

[27] Y. Zhang and Q. Yang, "A Survey on Multi-Task Learning," in IEEE Transactions on Knowledge and Data Engineering, doi: 10.1109/TKDE.2021.3070203.

[28] M. Crawshaw, "Multi-Task Learning with Deep Neural Networks: A Survey," arXiv:2009.09796v1, 2020.

[29] I. A. Pegoraro Santana et al., "Music4All: A New Music Database and Its Applications," 2020 International Conference on Systems, Signals and Image Processing (IWSSIP), 2020, pp. 399-404, doi: 10.1109/IWSSIP48289.2020.9145170.

[30] J. Pons, T. Lidy and X. Serra, "Experimenting with musically motivated convolutional neural networks," 2016 14th International Workshop on Content-Based Multimedia Indexing (CBMI), Bucharest, 2016, pp. 1-6, doi: 10.1109/CBMI.2016.7500246.

[31] B. CJ-Moore. An introduction to the psychology of hearing. Brill, 2012.

[32] Z. Yang, D. Yang, C. Dyer, X. He, A. Smola, and E. Hovy, "Hieraichical Attention Networks for Document Classification," 2016 Conference of the North American Chapter of the Association for Computational Linguistics: Human language Technology. 1480-1489, 2016.

[33] T.B. Mahieux, D. P. Ellis, B. Whitman, and P. Lamere, "The million song dataset," 12th ISMIR, Miami FL 591-596, 2011.

Authorized licensed use limited to: University of Wolverhampton. Downloaded on March 13,2026 at 04:29:49 UTC from IEEE Xplore. Restrictions apply.